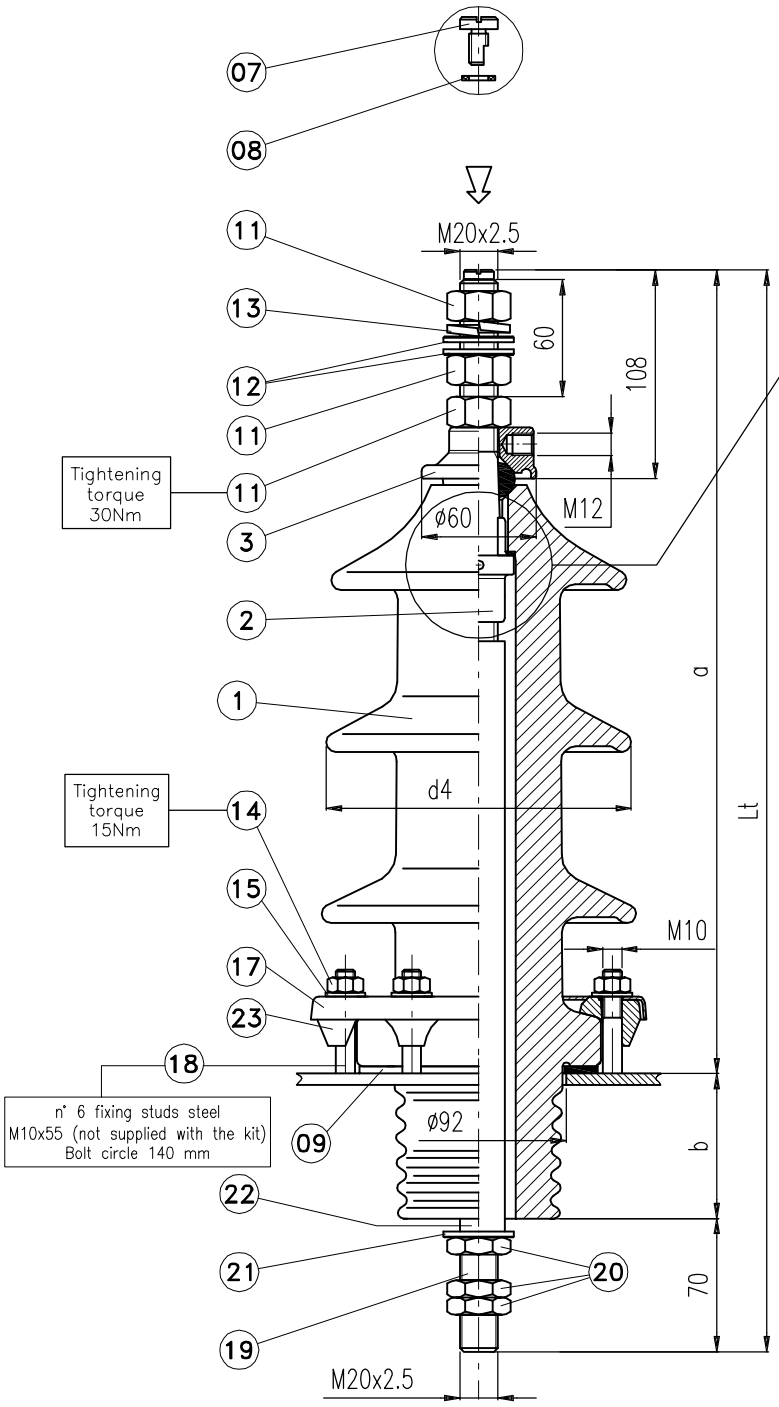

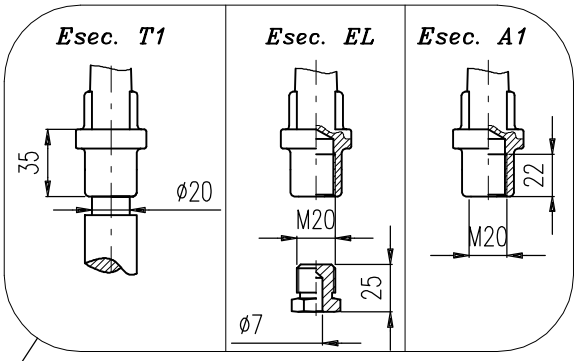

Pos.	Description
1	Porcelain
2	Brass bolt "D"
3	Brass cap "E"
5	Ring gasket "J"
6	Fiber gasket "O"
7	Vent screw
8	Nylon or fiber gasket
9	Flange gasket "N"
11	Brass nut M20 DIN 934
12	Brass washer ø21 DIN 125
13	Spring washer ø21 DIN 127
14	Mild steel zinkplated nut M10
15	Mild steel zinkplated washer ø10.5
17	Fixing ring "B" DIN 42531
18	Fixing stud M10x55 (not supplied)
19	Rigid copper rod
20	Brass locknut M20 DIN 936
21	Brass washer
22	Insulating tube C.B.
23	Alluminium clamping piece "E" DIN 42538

Bushing	*Voltage* KV	*Current* A	*PF 1'* kV	*BIL* kV	*Creepage distance*	a mm	b mm	La mm	Lt mm	d4 mm	*N°of sheds* Z	*G.W.* Kg	*Volume* dm³
10Nf/630	12	630	30	75	290	347	61	408	478	150	2	7.2	17
20Nf/630	24	630	55	125	440	422	76	498	568	165	3	9.2	25
30Nf/630	36	630	77	170	630	527	96	623	693	180	4	12.2	39
40Nf/630					830	617	171	788	858	190	5	15.9	50

THE FIGURE SHOWS THE BUSHING 20/630 (1:4 SCALE)

CEDASPE

Titolo

Outdoor transformer bushing
DIN 42532 and UNEL 38159/74
Rated current 630A

Data 11/03/13
Scala 1:4
Dis.
Visto

Dis. Nr 3782

1 2 3

FILE = 3782 .DWG
LMT [(0,0) (196,286)] A4 (210x297)
REV. 03 DTD 26/05/2017

La CEDASPE S.p.A. si riserva a termini di legge la proprietà del presente disegno con divieto di riprodurlo o comunicarlo a terzi senza sua autorizzazione.